PAZEMES HIDRANTS
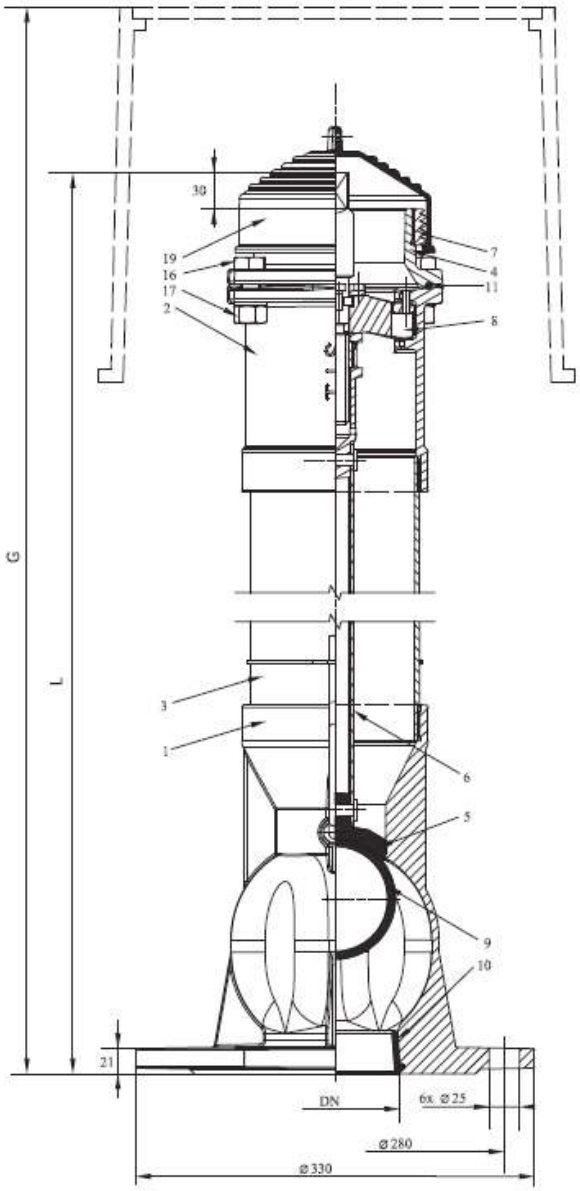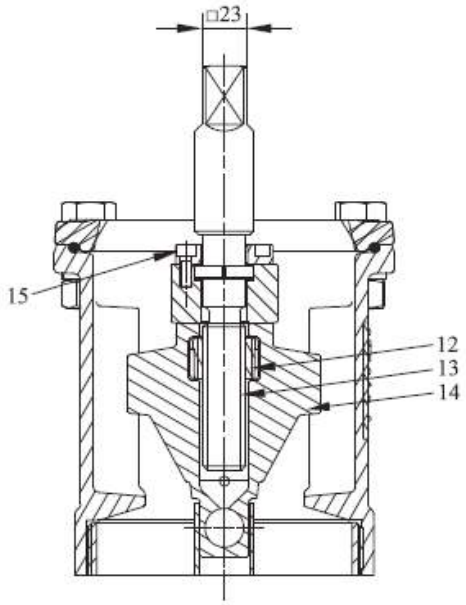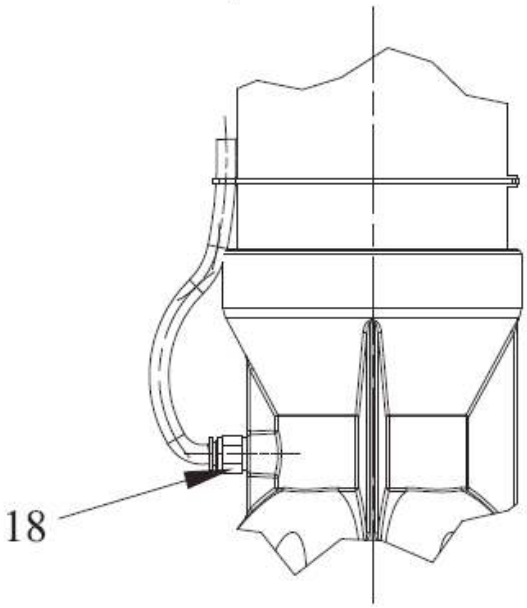
Tips HP-M DN 100 PN10